HADBRO TRANSMISSION PRODUCTS

SLASHER GEARBOX

MODEL:

GB-26 CH

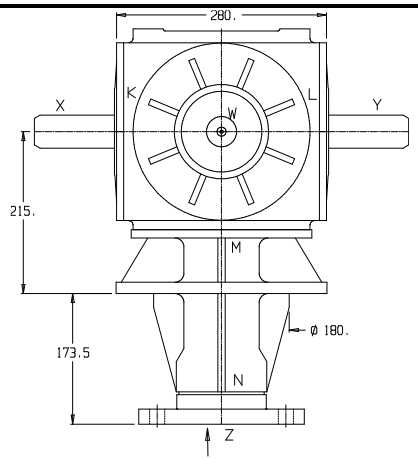

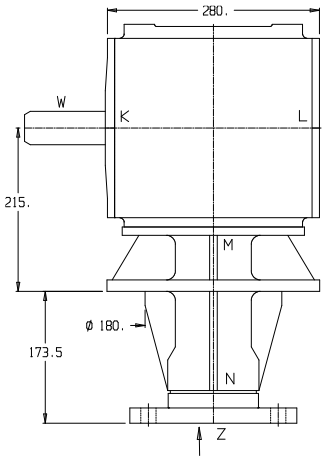

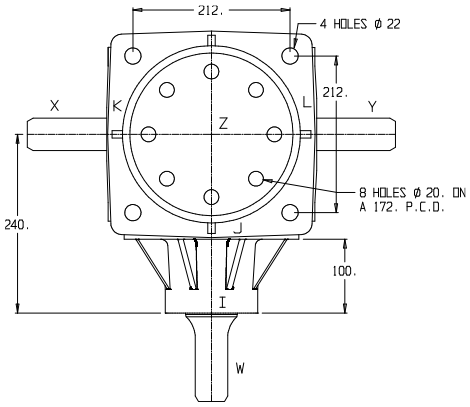

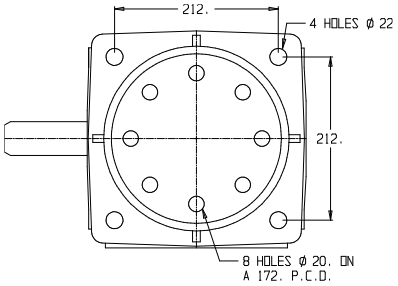

BEARINGS

I – 32016

J – 33211

K – 33209

L – 32016

M – 32016

N – 33211

WEIGHT

T/S & CUTTER HEAD
= 109 Kg

CUTTER HEAD ONLY
= 100 Kg

SHAFT DETAILS

R

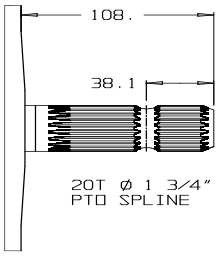

S

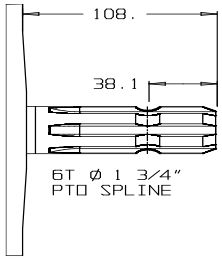

GEAR LUBRICATION

Mobilube HD Plus
85W-140

T

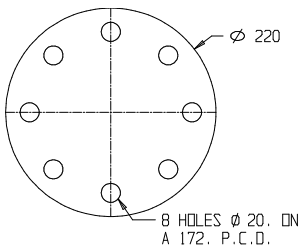

U

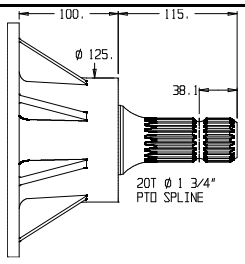

GEARS

CASE HARDENED

SHAFTS

HARDENED & GROUND

RATIO	INPUT R.P.M.	INPUT SHAFT	INPUT TYPE	POWER		OUTPUT TORQUE		SHAFTS				GEAR ASSY	CODE No	PRICES EX GST
				H.P.	K. W.	Lb Ins	NM	W	X	Y	Z			
1:1	540	W	1.75" 20T PTO Spline	190	141	22175	2505	U	-	-	T	4	B26U100T	$3450.00
								U	-	-	T	5	C26U100T	$3450.00

GEAR ASSEMBLY & SHAFT ROTATION – LOOKING FROM TOP

1

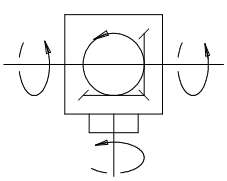

2

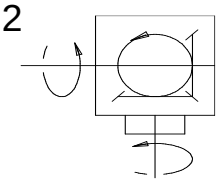

3

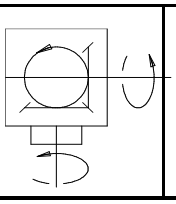

4

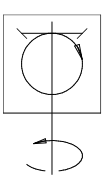

5

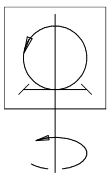

HADBRO TRANSMISSION PRODUCTS

SLASHER GEARBOX

MODEL:

GB-26 CH

RATIO		INPUT R.P.M.	INPUT SHAFT	INPUT TYPE	POWER		OUTPUT TORQUE		SHAFTS				GEAR ASSY	CODE No	PRICE EX GST
					H.P.	K.W.	Lb Ins	NM	W	X	Y	Z			
SPEED INCREASING UNITS	1:1.53	540	W	1.75" 20T PTO Spline	160	119	12210	1380	U	R	R	T	1	A26U153RT	$3750.00
									U	S	S	T		A26U153ST	$3750.00
									U	R	-	T	2	B26U153RT	$3750.00
									U	S	-	T		B26U153ST	$3750.00
									U	-	R	T	3	C26U153RT	$3750.00
									U	-	S	T		C26U153ST	$3750.00
					160	119	12210	1380	U	-	-	T	4	B26U153T	$3750.00
									U	-	-	T	5	C26U153T	$3750.00
	1:1.88	540	W	1.75" 20T PTO Spline	140	104	8714	984	U	R	R	T	1	A26U188RT	$3750.00
									U	S	S	T		A26U188ST	$3750.00
									U	R	-	T	2	B26U188RT	$3750.00
									U	S	-	T		B26U188ST	$3750.00
									U	-	R	T	3	C26U188RT	$3750.00
									U	-	S	T		C26U188ST	$3750.00
					140	104	8714	984	U	-	-	T	4	B26U188T	$3750.00
									U	-	-	T	5	C26U188T	$3750.00

GEAR ASSEMBLY & SHAFT ROTATION– LOOKING FROM TOP

1 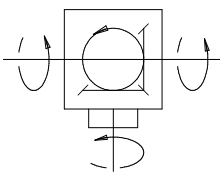

2 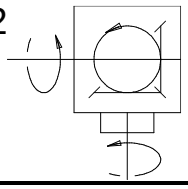

3 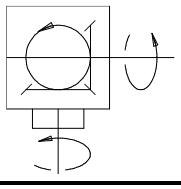

4 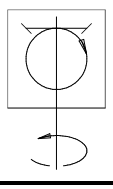
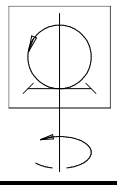
5